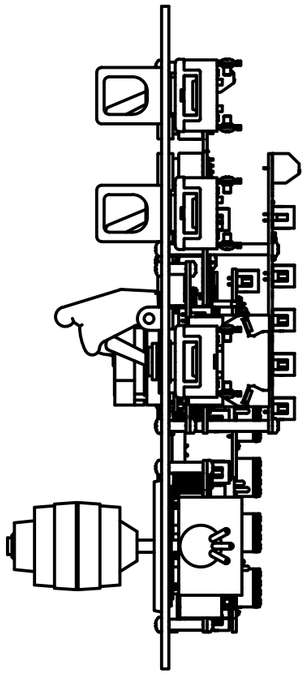

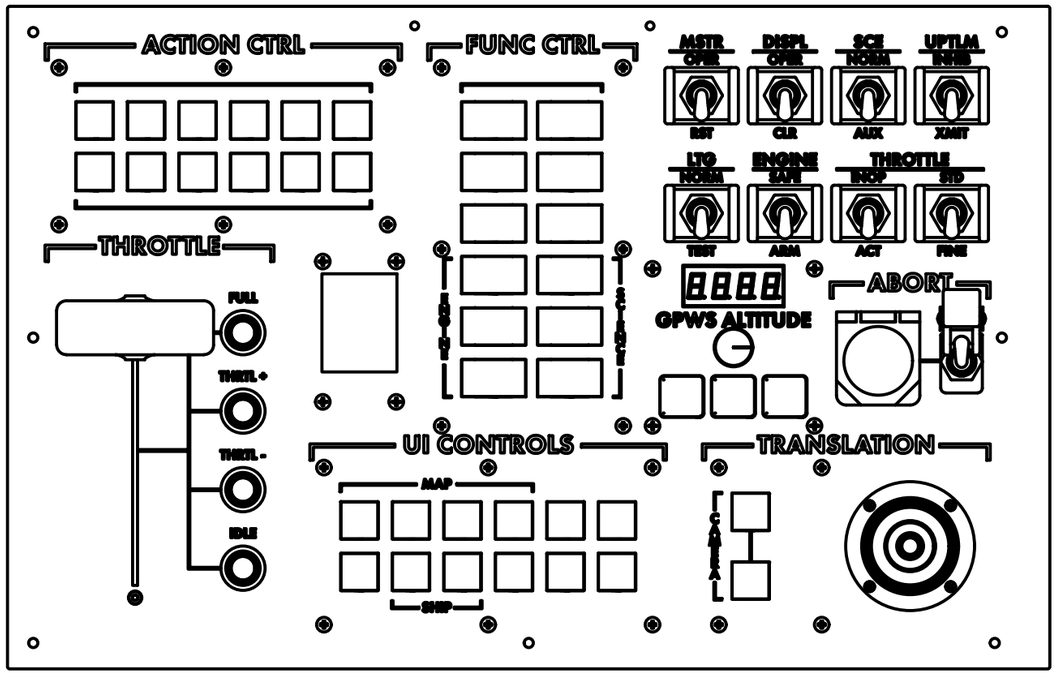


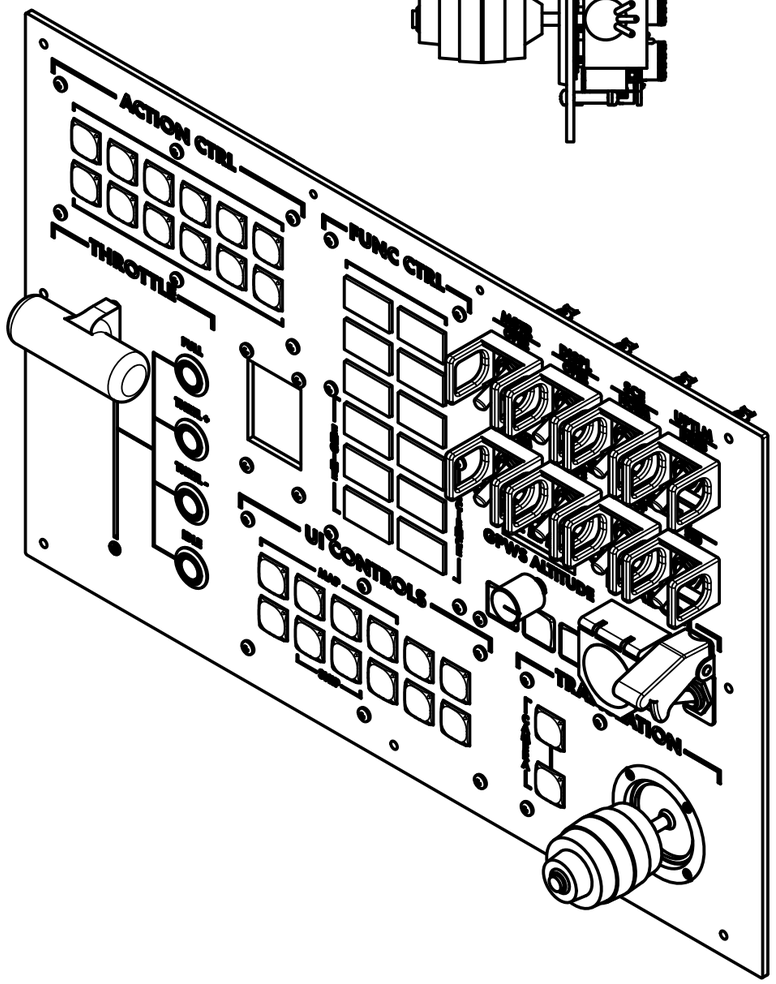


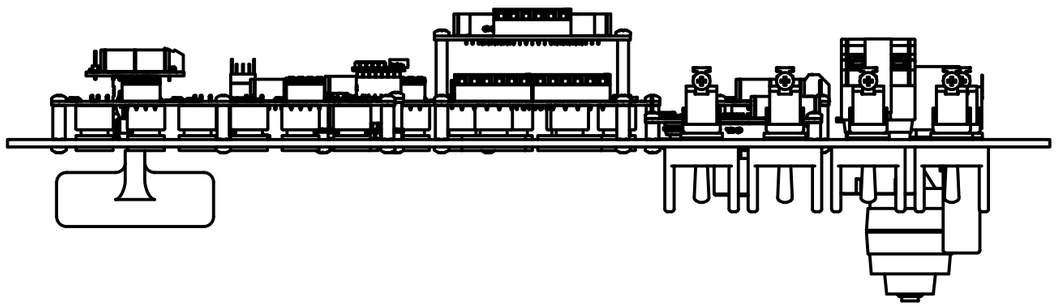

| Dept. | Technical reference | Created by | Approved by |
|---|---|---|---|
| | Scale 2:5 | J. Rostoker 6/21/2026 | J. Kerman 6/21/2026 |
| JEB'S CONTROLLER WORKS | Document type: Assembly Drawing | Document status: RELEASED | |
| | Title: Console Panel - A2 Complete Kerbal Controller Mk1 | DWG No. KC-01-1030 | |
| | | Rev. A | Date of issue 6/21/2026 |
| | | | Sheet 1/4 |

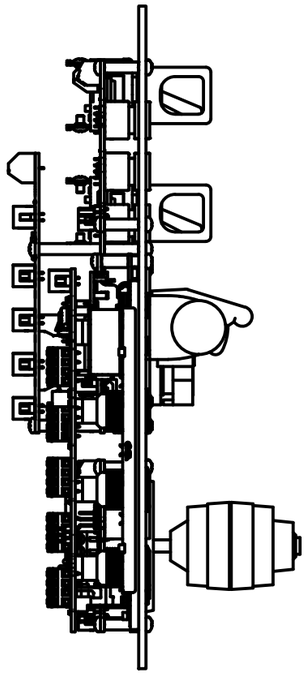

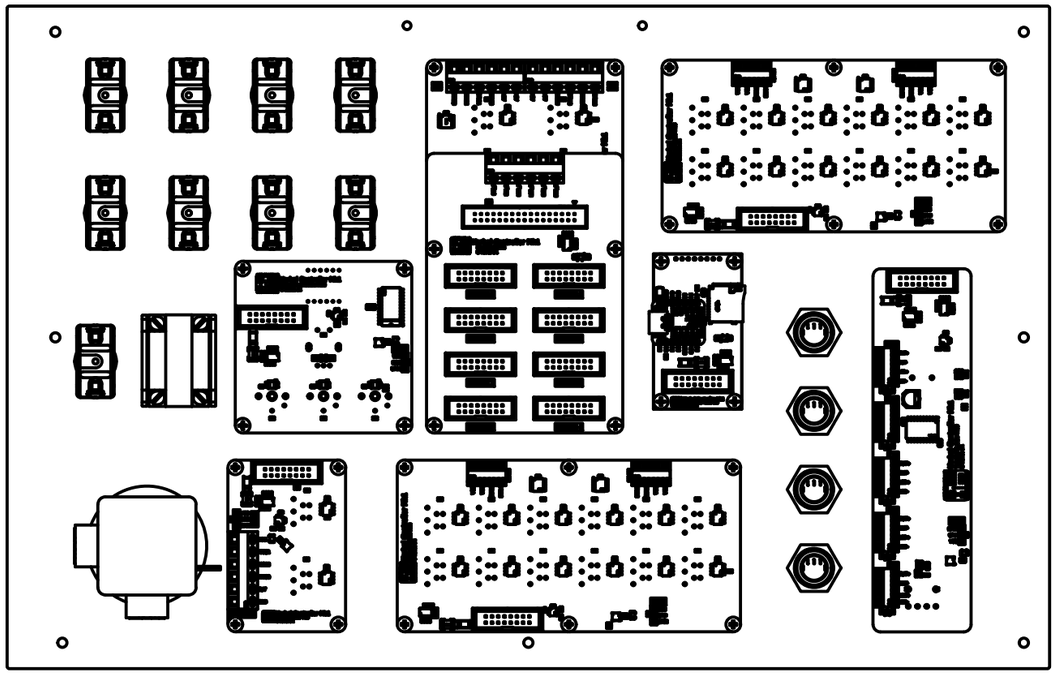

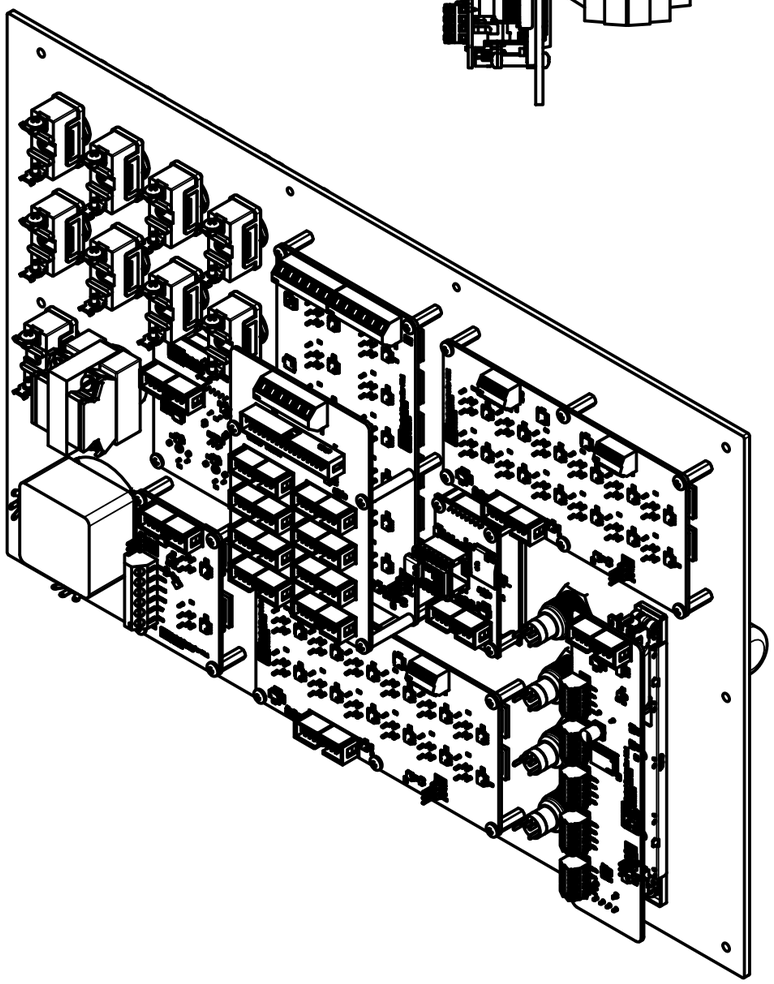

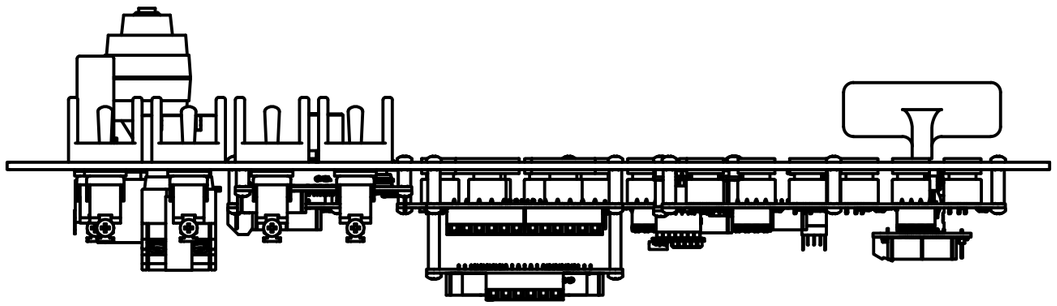

| Dept. | Technical reference | Created by | Approved by |
|---|---|---|---|
| | Scale 2:5 | J. Rostoker 6/21/2026 | J. Kerman 6/21/2026 |
| JEB'S CONTROLLER WORKS | Document type: Assembly Drawing | Document status: RELEASED | |
| | Title: Console Panel - A2 Complete Kerbal Controller Mk1 | DWG No.: KC-01-1030 | |
| | | Rev. A | Date of issue 6/21/2026 |
| | | | Sheet 2/4 |

## Parts List

| Item | Qty | Part Number | Part Name | Description |
|---|---|---|---|---|
| 1 | 1 | 10-1031 | Console Panel - A2 Base | Acrylic, Stone - 0%; 3.00mm; Mfr: Ponoko |
| 2 | 1 | 10-1830 | Joystick Module Complete | 3-axis analog joystick inputs, 2x RGB Push Button Module; ATTiny816 microcontroller |
| 3 | 22 | 92000A118 | Screw - M3 - 8mm | Passivated 18-8 Stainless Steel Pan Head Phillips Screws, M3 x 0.5mm Thread, 8mm Long |
| 4 | 1 | JH-DX400B-R4 | Joystick - D400B-M4 | 4-axis 10K Ohm panel-mount joystick potentiometer |
| 5 | 1 | 10-1840 | 7-Segment Display Module Complete | 7-Segment Display Module; ATTiny816 microcontroller; MAX7219 display driver; rotary encoder; 3 push buttons w/ neopixel illumination |
| 6 | 4 | 92000A114 | Screw - M3 - 5mm | Passivated 18-8 Stainless Steel Pan Head Phillips Screws, M3 x 0.5mm Thread, 5mm Long |
| 7 | 1 | 90000001 | Button Cover - 22mm | Push Button Transparent Cover Guard, 22mm, No Spring |
| 8 | 1 | LA38-11DS-R | Push Button Illuminated - 22mm - RED | Zhrivoer, 22mm LA38-11DS with Light Flat Head Button Switch Momentary Push button switch 10A/440V AC/DC 6V |
| 9 | 1 | 11000001 | Toggle Switch Cover - Red | Omval, Toggle Switch Cover Flip Cap, 12mm, Red |
| 10 | 9 | 10000001 | Switch - SPST On/Off Toggle | Omval, 12mm Fixed Toggle Switch 2 pin, SPST |
| 11 | 8 | PDM-005 | Switch Guard | Hard-anodized A356-T6 aluminum 1.18″ wide, 0.90″ X 1.04; Space Shuttle Replica |
| 12 | 1 | 01-1810 | Button Module Wide Complete | 12x RGB Push Button Module; 8x switch inputs; ATTiny816 microcontroller. Attached Panel connection hub |
| 13 | 2 | 01-1800 | Button Module Complete | 12x RGB Push Button Module; 4x switch inputs; ATTiny816 microcontroller |
| 14 | 4 | B079FKG8B1 | Push Button - 16mm - Metal LED BLUE | Rugged Metal Pushbutton with White LED Ring - 16mm Blue Momentary |
| 15 | 1 | 10-1900 | Display Driver 2" Complete | 2" TFT LCD Display; ST7789 Driver; ; ATTiny816 microcontroller; Seeed XIAO RP2350 module; On-board SDCard slot |
| 16 | 4 | 92000A120 | Screw - M3 - 10mm | Passivated 18-8 Stainless Steel Pan Head Phillips Screws, M3 x 0.5mm Thread, 10mm Long |
| 17 | 1 | 10-1870 | Throttle Module Complete | Throttle Module; RA0N11M9A0J Motoroized 10K Potentiometer; 9V drive; L293DD Motor Driver; ATTiny816 microcontroller; Touch Indicator; 5x push button inputs w/ common LED output drive |
| 18 | 2 | 91223QA412 | Screw - M3 - 6mm_ULP | M3 x 0.50 mm Thread, 6 mm Long, 316 Stainless Steel Ultra-Low-Profile Socket Head Screw |

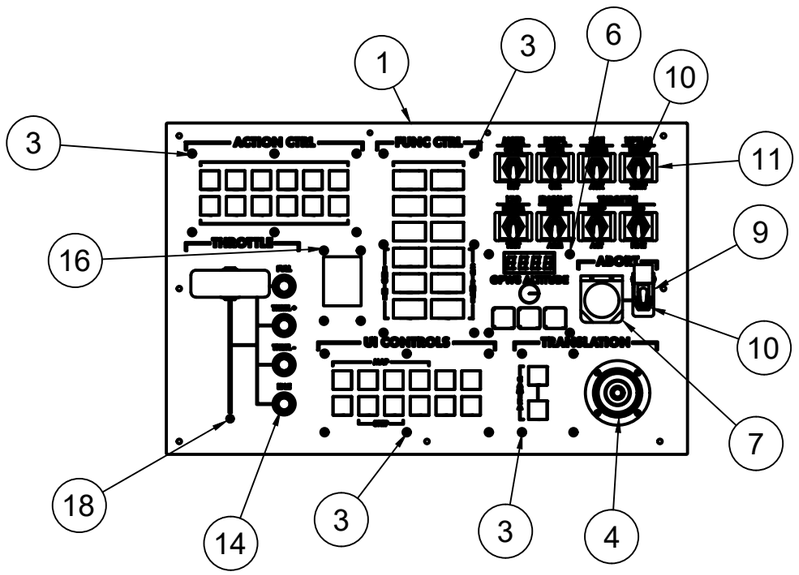


| Dept. | Technical reference | Created by | Approved by |
|---|---|---|---|
| | Scale 1:4 | J. Rostoker 6/21/2026 | J. Kerman 6/21/2026 |
| JEB'S CONTROLLER WORKS | | Document type: Assembly Drawing | Document status: RELEASED |
| | | Title: Console Panel - A2 Complete Kerbal Controller Mk1 | DWG No.: KC-01-1030 |
| | | | Rev. A · Date of issue 6/21/2026 · Sheet 3/4 |

## Parts List

| Item | Qty | Part Number | Part Name | Description |
|---|---|---|---|---|
| 1 | 1 | 10-1031 | Console Panel - A2 Base | Acrylic, Stone - 0%; 3.00mm; Mfr: Ponoko |
| 2 | 1 | 10-1830 | Joystick Module Complete | 3-axis analog joystick inputs, 2x RGB Push Button Module; ATTiny816 microcontroller |
| 3 | 22 | 92000A118 | Screw - M3 - 8mm | Passivated 18-8 Stainless Steel Pan Head Phillips Screws, M3 x 0.5mm Thread, 8mm Long |
| 4 | 1 | JH-DX400B-R4 | Joystick - D400B-M4 | 4-axis 10K Ohm panel-mount joystick potentiometer |
| 5 | 1 | 10-1840 | 7-Segment Display Module Complete | 7-Segment Display Module; ATTiny816 microcontroller; MAX7219 display driver; rotary encoder; 3 push buttons w/ neopixel illumination |
| 6 | 4 | 92000A114 | Screw - M3 - 5mm | Passivated 18-8 Stainless Steel Pan Head Phillips Screws, M3 x 0.5mm Thread, 5mm Long |
| 7 | 1 | 90000001 | Button Cover - 22mm | Push Button Transparent Cover Guard, 22mm, No Spring |
| 8 | 1 | LA38-11DS-R | Push Button Illuminated - 22mm - RED | Zhrivoer, 22mm LA38-11DS with Light Flat Head Button Switch Momentary Push button switch 10A/440V AC/DC 6V |
| 9 | 1 | 11000001 | Toggle Switch Cover - Red | Omval, Toggle Switch Cover Flip Cap, 12mm, Red |
| 10 | 9 | 10000001 | Switch - SPST On/Off Toggle | Omval, 12mm Fixed Toggle Switch 2 pin, SPST |
| 11 | 8 | PDM-005 | Switch Guard | Hard-anodized A356-T6 aluminum 1.18″ wide, 0.90″ X 1.04; Space Shuttle Replica |
| 12 | 1 | 01-1810 | Button Module Wide Complete | 12x RGB Push Button Module; 8x switch inputs; ATTiny816 microcontroller. Attached Panel connection hub |
| 13 | 2 | 01-1800 | Button Module Complete | 12x RGB Push Button Module; 4x switch inputs; ATTiny816 microcontroller |
| 14 | 4 | B079FKG8B1 | Push Button - 16mm - Metal LED BLUE | Rugged Metal Pushbutton with White LED Ring - 16mm Blue Momentary |
| 15 | 1 | 10-1900 | Display Driver 2" Complete | 2" TFT LCD Display; ST7789 Driver; ; ATTiny816 microcontroller; Seeed XIAO RP2350 module; On-board SDCard slot |
| 16 | 4 | 92000A120 | Screw - M3 - 10mm | Passivated 18-8 Stainless Steel Pan Head Phillips Screws, M3 x 0.5mm Thread, 10mm Long |
| 17 | 1 | 10-1870 | Throttle Module Complete | Throttle Module; RA0N11M9A0J Motoroized 10K Potentiometer; 9V drive; L293DD Motor Driver; ATTiny816 microcontroller; Touch Indicator; 5x push button inputs w/ common LED output drive |
| 18 | 2 | 91223QA412 | Screw - M3 - 6mm_ULP | M3 x 0.50 mm Thread, 6 mm Long, 316 Stainless Steel Ultra-Low-Profile Socket Head Screw |

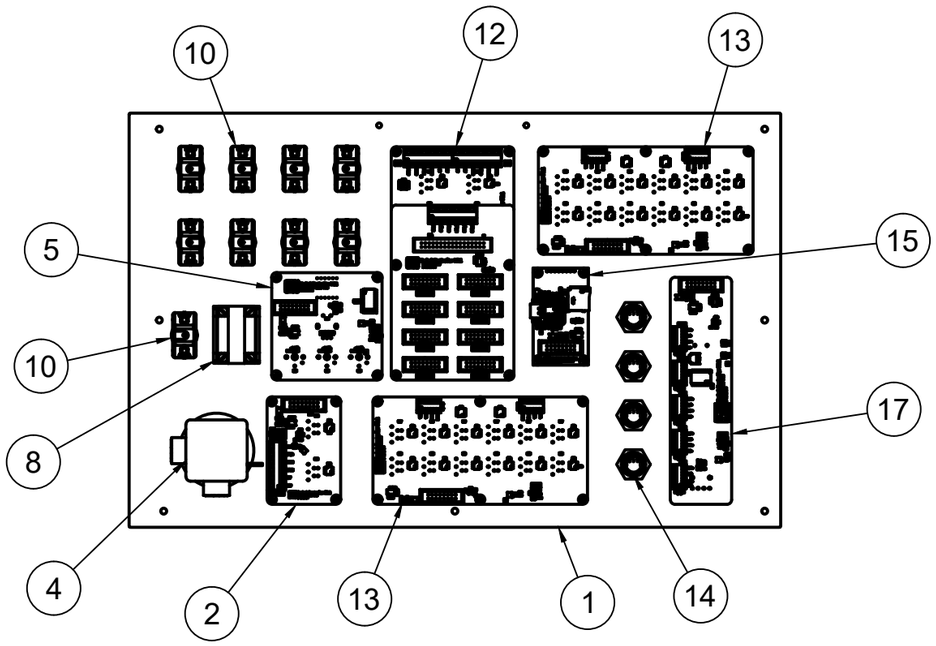


| | | | |
|---|---|---|---|
| Dept. | Technical reference: Scale 1:4 | Created by: J. Rostoker 6/21/2026 | Approved by: J. Kerman 6/21/2026 |
| JEB'S CONTROLLER WORKS | | Document type: Assembly Drawing | Document status: RELEASED |
| | | Title: Console Panel - A2 Complete Kerbal Controller Mk1 | DWG No.: KC-01-1030 |
| | | | Rev.: A · Date of issue: 6/21/2026 · Sheet: 4/4 |